Installation Instruction Manual For

DARREX AIR™

Air Cooled Diode Rectifier Replacement

For Alterrex™ Excitation Systems

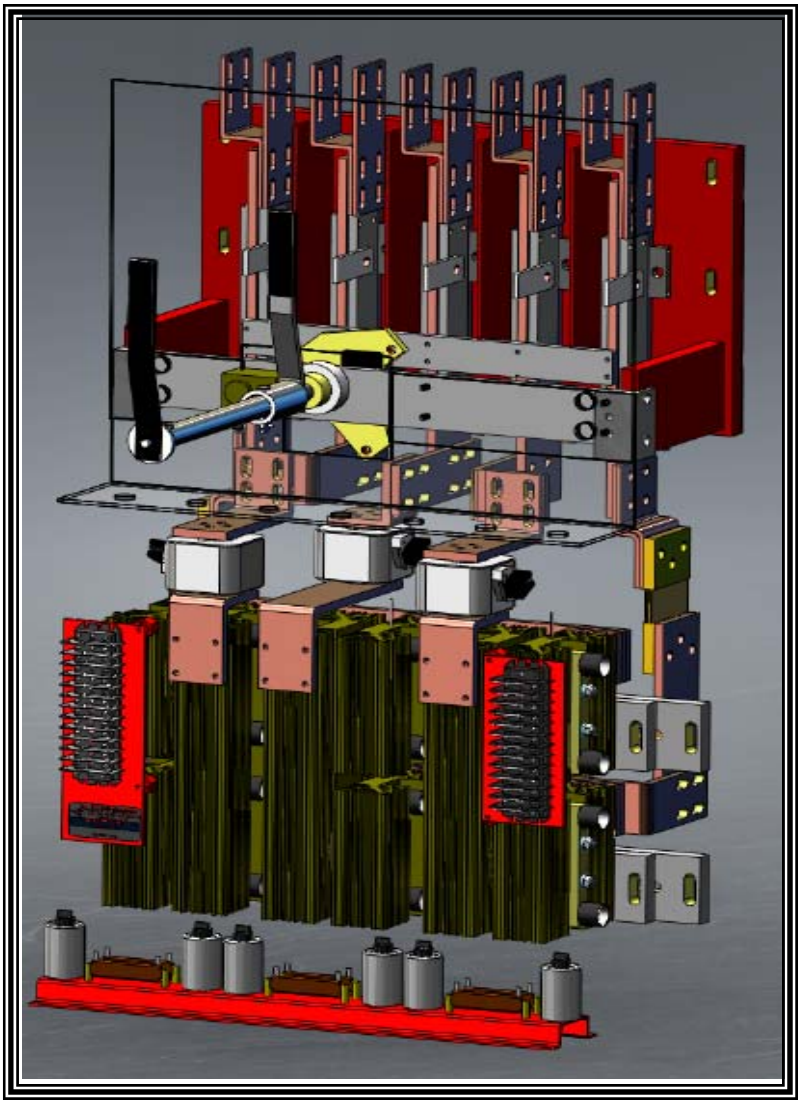

US PATENT PENDING

Contents

DESCRIPTION…….. **3**
SPECIFICATIONS……. **3**
SYSTEM OPERATION……. **4**
MAINTENANCE……..… **4**
DIMENSIONAL DRAWINGS……..… **7**
INSTALLATION SEQUENCE…….. **7**
OPTIONAL EQUIPMENT INTERFACE……. **9**
INDICATING LIGHT PANEL
- FUSE STATUS INDICATION
- SWITCH STAUS INDICATION
- DC CURRENT MONITORING
- PROTECTIVE TEMPERATURE RELAY OR METERING
- EXTENSION ROD

APPROXIMATE TORQUE SETTINGS…… **10**
RECOMMENDED SPARE PARTS…….. **10**

Description:

The new air-cooled 2000A Rectifier Bridge is a direct replacement for the existing Alterrex water-cooled design. Using the latest in Semiconductor technology there is no longer the need to series and parallel the Semiconductors to achieve the Voltage and Current ratings for the system. Couple that with a compatible Five Pole disconnect Switch that is a drop in replacement to that originally used and you have a robust economical solution that will endure for many years.

There are design enhancements such as Fuse Blown Indicators and Thermal monitoring RTD's (Resistive Temperature Detector) on each of the heat sink stacks that will annunciate a blown fuse and critical rise in temperature before failure mode is reached. The Disconnect Switch has the option for Auxiliary contacts that can be connected to a remote indicator as well as a lock out feature for safety. Both Positive and Negative DC Busses can be monitored for current.

The Air Cooled design eliminates all known safety concerns and hazards that the existing Water Cooled design has and offers additional advantages and features both Mechanically and Electrically.

Specifications:

- Voltage Rating: ` 1000V
- Current Rating: 2000A
- Design Ambient: 50°C
- Shunt Rating: 50mV = 2000A
- Fuse Rating: 2400A – 1000V
- Fuse Micro Switch Rating: 10A – 250Vac
- Disconnect Switch Rating: 2000A – 1000V
- Switch Aux Contact Rating: 10A – 250Vac

System Operation:

WARNING!: In a system where multiple switches are connected in parallel it is acceptable that a switch may be operated for isolation purposes with the system energized so that maintenance or testing of an individual rectifier can be carried out under the following condition:-

1] Other Rectifier Bridges, capable of carrying the full system load, are conducting in parallel.

Under NO CIRCUMSTANCES should a switch be operated without other Rectifier Bridges in circuit and conducting!

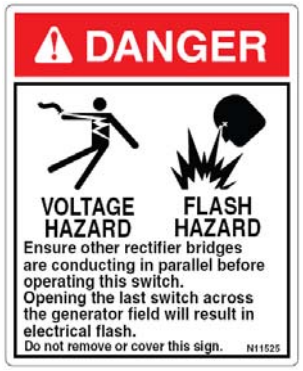

Maintenance:

CAUTION: Switch must be completely de-energized and in the open position. Make sure all power to the circuit feeding the switch has been turned off and isolated before removing the barriers and attempting any inspection or maintenance of the switch or bridge.

Inspection

Periodic switch inspection is recommended at least once a year. More frequent inspection is recommended if the switch is operated in severe conditions such as frequent operation, dusty or moist environment or other unfavorable conditions. At the regular interval the following should be inspected:

Disconnect the bar connecting the switch to the operating mechanism by removing the connecting pin on the cross bar or actuator.

Manually operate the switch by means of a large adjustable wrench on the crossbar. Operate the switch slowly and observe contact alignment and operating mechanism. The switch should operate freely with no binding or friction.

Check to be sure that contacts are fully locked in the closed position. In this position, the leading edge of the clip actuator should be perpendicular to the switch base. The switch connecting cross bar should be approximately parallel to the switch base.

Check for signs of overheating. If the switch has been overheated, a complete inspection of the contacts and connections is required. A complete inspection of the switch contacts should always be performed after the switch has been operated under a fault condition.

Auxiliary switches (cam operated)

The auxiliary switch make/break positions may be adjusted as follows:

- Loosen the socket head clamp screw.
- Rotate the cam until the desired position is obtained
- Tighten the clamp screw
- Check switch for proper operation

Lubrication

The switch and its operating mechanism were properly lubricated during assembly. Operation under sever conditions could result in additional lubrication being required. Follow the following procedure if lubrication is required.

- Clean contact surfaces to remove existing lubricant.
- Apply Nye Rheolube 748S grease to the contact surface of the blade and clip.
- Clean and lubricate all poles.

Lubrication of the hinge contacts requires disassembly of the clamping mechanism as follows:-

Before opening the switch, mark the location of the nut by putting a mark on the nut and blade. Open the switch and loosen the anti-rotation screw in the nut far enough to allow the clamp nut to turn. Do not remove the anti-rotation screw from the nut. Remove the clamping nut making sure to keep an accurate count of the number of rotations required for its removal.

This count is required to assure the nut is returned to its factory set position. Repeat procedure for both the clip and hinge nuts. Remove the L.H. blade. Remove the R.H. blade and clamping mechanism. The hinge contacts may now be cleaned and lubricated. Reassemble the switch by reversing the above procedure taking care to return the clamping nuts to the clip or hinge from which they were removed. Light machine oil may

be applied to switch mechanism. Manually operate switch and check for smooth operation.

DO NOT ADJUST THE BOLTED PRESSURE MECHANISM TO OTHER

THAN ITS FACTORY SETTING.

The mechanism is factory set to obtain the proper contact pressure at the bolted

connection and should not require any adjustment under normal operating conditions.

Switch Component Diagram

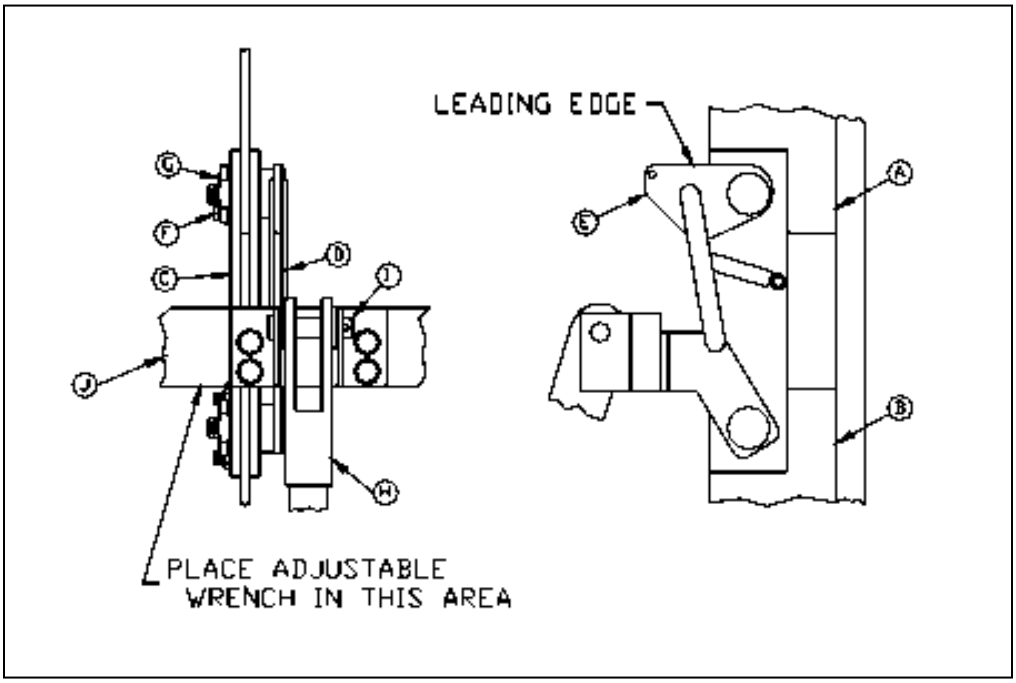

Legend

A) Clip

B) Hinge

C) L.H. Blade

D) R.H. Blade w/Clamping Mechanism

E) Clip Actuator plate

F) Anti-Rotation Screw

G) Clamping Nut

H) Connecting Bar

I) Connecting Pin

J) Cross Bar

The air-cooled bridge requires periodic maintenance to remove dust build up if necessary. Check all Terminal connections for tightness (See page 10 for torque settings). Perform a visual check for signs of overheating and/or foreign materials in close proximity to the bridge. This can all be done as part of the plant maintenance program.

Dimensional Drawings

Refer to Fig 4 for Mounting and Overall dimensions.

Installation Sequence – Switch & Bridge.

Note: Before installation of the new equipment, first ensure that the cubical is completely empty. It is also recommended that all water lines be removed to prevent future leaks.

Supplied Equipment: Qty. 1- 5 Pole Disconnect Switch & Backing Panel
Qty. 1-Rectifier Bridge Assembly
Qty. 1-Snubber Assembly
Qty. 1-Safety Barrier
Qty. 2-Mounting Rails
Mounting Hardware **24** - ½" x 2" Nuts Bolts & Washers
4 - ½" x 3 ½" Nuts Bolts & Washers
4 - #10 Sheet Metal Screws

Hardware NOT supplied but is needed: **4** - ½" Unistrut Bolts

Special Tools Needed for installation Socket Set, Power Drill, Drill bits, Measuring Tape. Lifting Equipment with nylon slings and 'D' Shackles (No Chains or Wire slings permitted), Rivet gun. Electrical wiring tools etc.

1] Insert 4 Uni-Strut bolts (not included) through 1/8th inch Switch backing panel.

Important – Mount Backing Panel Before mounting Switch

Note: Center 1/8" backing panel, side to side, before mounting the Switch.

2] Next measure and drill 5/8" Holes for the Bridge Mounting Rails in cabinet side rails as shown in Fig 4. **Note:** Measure from Center of Slots on Switch Back Panel.

3] Use lifting equipment to locate Disconnect Switch onto Uni-Strut bolts. Center the Disconnect Switch in the slots and finger tighten. Do not tighten bolts at this point See Fig 2 for lifting point location.

4] Next install lower Mounting Rail only. Secure Rail to back side of cabinet side rails using ½" x 1.5" hardware provided. Do not tighten bolts.

5] Use proper lifting equipment to locate Bridge onto the lower Mounting Rail and secure using ½" x 2.5" hardware provided. ****CAUTION** Be careful not to damage Shunts or Bus work during Lifting.** Do not tighten mounting bolts. See Fig 3 for lifting point located on Rectifier Assembly.

6] Feed the Upper Mounting Rail behind Bridge and secure to back side of cabinet side rails and secure to upper Bridge rail using ½" x 2.5" hardware provided. Do not tighten bolts.

7] Connect all bus bars between Bridge and Switch, using ½" x 1.5" hardware provided. Do not tighten bolts. See Fig 4-7.

8] Before tightening all the bolts ensure that the assembly is centered and lined up correctly. Now Tighten all Mounting and Bus Bar bolts.

9] Mount Polycarbonate Safety Barrier, item 45 to Switch using existing hardware on switch, and wire TB2. (See Fig 5-7)

10] Lay Snubber assembly, item 49, below bridge and mount to floor of cabinet and secure using #10 sheet metal screws provided. ****CAUTION** Be aware of clearance between Snubbers and Heatsink.** Wire Snubbers to bridge as shown in Fig 1 &Fig 8.

11] Connect Input Bus Bar (not supplied) between 5 Pole Switch and main Bus.

12] Perform final checks on all hardware.

Installation Sequence – Bridge Only.

Note: Before installation of the new equipment, first ensure that the existing Bridge and all bus work is completely removed from the cabinet below the Switch. It is also recommended that all water lines be removed to prevent future leaks.

Supplied Equipment: Qty. 1-Rectifier Bridge Assembly
Qty. 1-Snubber Assembly
Qty. 2-Mounting Rails
Qty. 1 Bus Connection Kit (Optional)
Mounting Hardware **24** - ½" x 2" Nuts Bolts & Washers
4 - ½" x 3 ½" Nuts Bolts & Washers
4 - #10 Sheet Metal Screws

Special Tools Needed for installation Socket Set, Power Drill, Drill bits, Measuring Tape. Lifting Equipment with nylon slings and 'D' Shackles (No Chains or Wire slings permitted), Rivet gun. Electrical wiring tools etc.

1] Measure and drill 5/8" Holes for the Bridge Mounting Rails in cabinet side rails as shown in Fig 4. (Dimensions in Blue***)

2] Next install lower Mounting Rail only. Secure Rail to back side of cabinet side rails using ½" x 1.5" hardware provided. Do not tighten bolts.

3] Use proper lifting equipment to locate Bridge onto the lower Mounting Rail and secure using ½" x 2.5" hardware provided. ****CAUTION** Be careful not to damage Shunts or Bus work during Lifting.** Do not tighten mounting bolts. See Fig 3 for lifting point located on Rectifier Assembly.

4] Feed the Upper Mounting Rail behind Bridge and secure to back side of cabinet side rails and secure to upper Bridge rail using ½" x 2.5" hardware provided. Do not tighten bolts. **Note:** A minimum clearance of 1.5" between cabinet floor and bottom of heat sink is required.

5] Connect all bus bars between Bridge and Existing Switch, using Optional Bus Kit provided, with ½" x 1.5" hardware at Bridge and existing ⅜" hardware at Switch. Do not tighten bolts. See Fig 4-7.

6] Before tightening all the bolts ensure that the assembly is centered and lined up correctly. Now Tighten all Mounting and Bus Bar bolts.

7] Lay Snubber assembly, item 49, below bridge and mount to floor of cabinet behind Bridge and secure using #10 sheet metal screws provided. ****CAUTION** Be aware of clearance between Snubbers and Heatsink.** Wire Snubbers to bridge as shown in Fig 1 &Fig 8.

8] Perform final checks on all hardware.

Optional Equipment Interface

Indicating Light Panel (s)

A20095A - Indicating Light Panel provides visual indication for Fuse Failure, Status of the 5 Pole Disconnect Switch and High Temp indication. Panel has Analog Meter for local Current monitoring. The Light Panel requires 120VAC or DC. See Fig 10 & 11 for details.

A20095D - Indicating Light Panel provides visual indication for Fuse Failure, Status of the 5 Pole Disconnect Switch and High Temp indication. Panel has Digital Meter for local Current monitoring. The Light Panel requires 120VAC. See Fig 10 & 11 for details.

Fuse Status Indication

Three (3) power semiconductor fuses are provided with blown fuse indication. A contact will close identifying the open fuse. See Fig 1 TB2 for interconnection points. These contact outputs can be interfaced with the Indicating Light Panel Option. See Fig 11 & 12 for wiring / mechanical details.

Switch Status Indication

One (1) Switch status contact is provided to indicate the 5-pole Disconnect Switch is open or closed. This contact closes when the 5-pole Switch is closed. See Fig 1 TB2 for interconnection points. This contact output can be interfaced with the Indicating Light Panel Option. See Fig 11 & 12 for wiring / mechanical details.

DC Current Monitoring

Two (2) shunts (M1 & M2) are provided in the Rectifier Bridge output circuit. The Shunts are rated for 2000A to 50mvdc. The shunts can be used to monitor the actual Pos & Neg output current of each rectifier bridge. The monitoring device can be a suitable Voltmeter for remote indication. See Fig 1 TB2 for interconnection points. See Fig 11 & 12 for wiring / mechanical details.

Protective Temperature Relay or Metering Device

Six (6) Resistive Thermal Devices (RTD1-6) are provided to allow temperature monitoring of each six (6) Semiconductors located in the Rectifier Bridge Assembly. The RTD's are 100Ω Platinum Resistive Thermal Devices. See Fig 1 TB1 for interconnection points.

Extension Rod for Switch

The Extension Rod option allows the operator to open and close the switch from the safety of a closed door. The Rod is Field installable and upgradeable. See Fig 13 for details.

Approximate Torque Settings for Zinc-plated Bolts in foot pounds

BOLT GRADE	Bolt Diameter in Inches									
	1/4	**5/16**	**3/8**	**7/16**	**1/2**	**9/16**	**5/8**	**3/4**	**7/8**	**1**
SAE2	4.6	9	15	24	36	50	69	117	184	273
SAE3	6.9	14	24	38	57	82	113	198	317	477
***SAE5**	7.5	15	25	40	59	83	114	196	309	459
SAE6,7	9.7	19	34	55	83	120	166	291	469	710
SAE8	10.5	21	37	60	90	130	180	316	509	769

*Highlighted row is hardware grade used

****IMPORTANT NOTE****

THE ABOVE TORQUE SETTINGS ARE APPROXIMATE. CONSULT PLANT ENGINEER FOR APPROVAL OF THESE SETTINGS.

Recommended Spare parts

	Description	Item	Part #
•	2400A Fuses	F1,F2,F3	F27004
•	Fuse Micro Switches	F1/SW,F2/SW,F3/SW	F27004-1
•	Snubber Capacitors	C1-6	C12027I
•	Snubber Resistors	R1-6	R13026
•	Diodes	D1-6	5SDD51L28

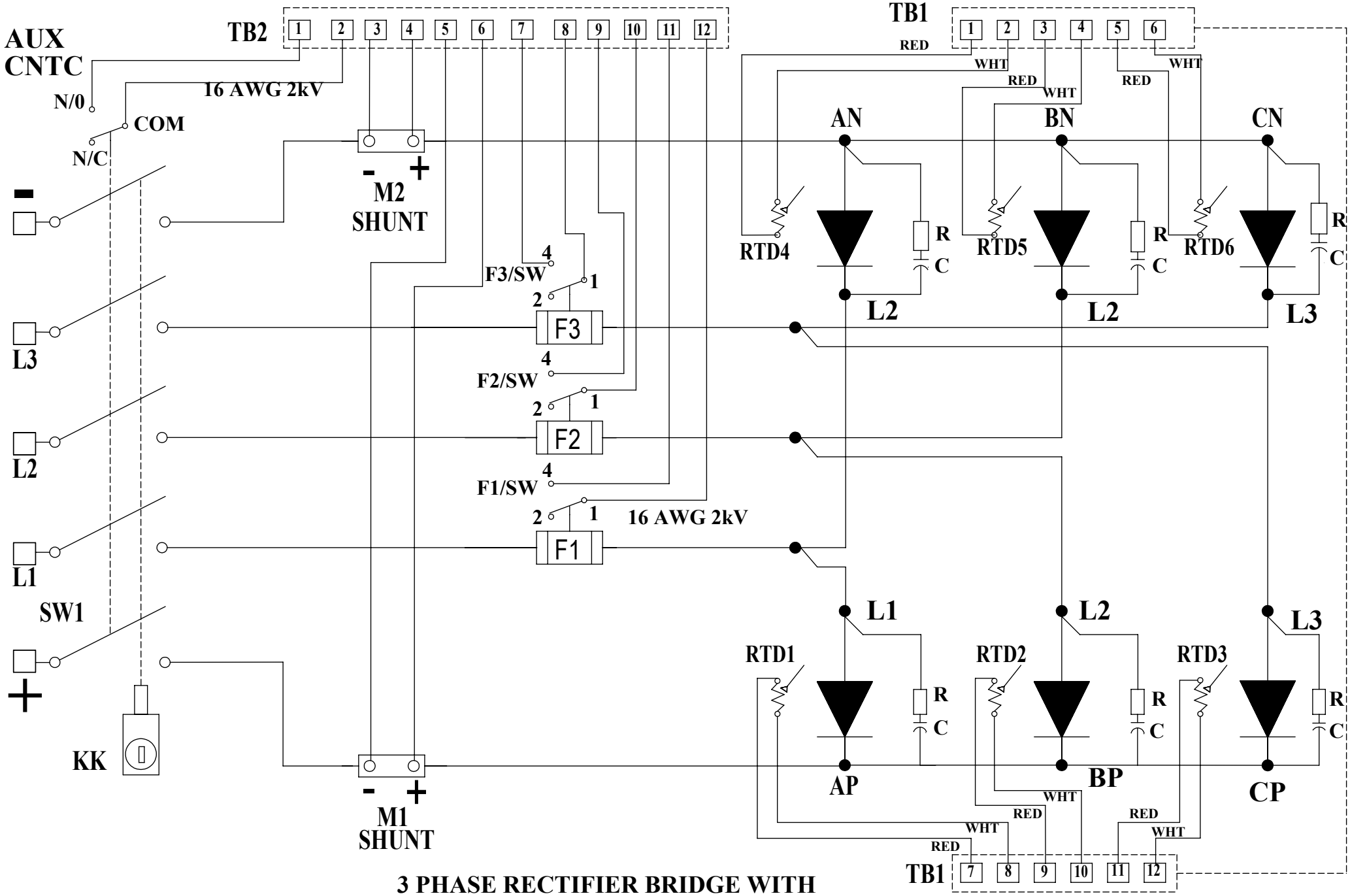

3 PHASE RECTIFIER BRIDGE WITH OPTIONAL 5 POLE SWITCH WIRING DIAGRAM

FIG 1

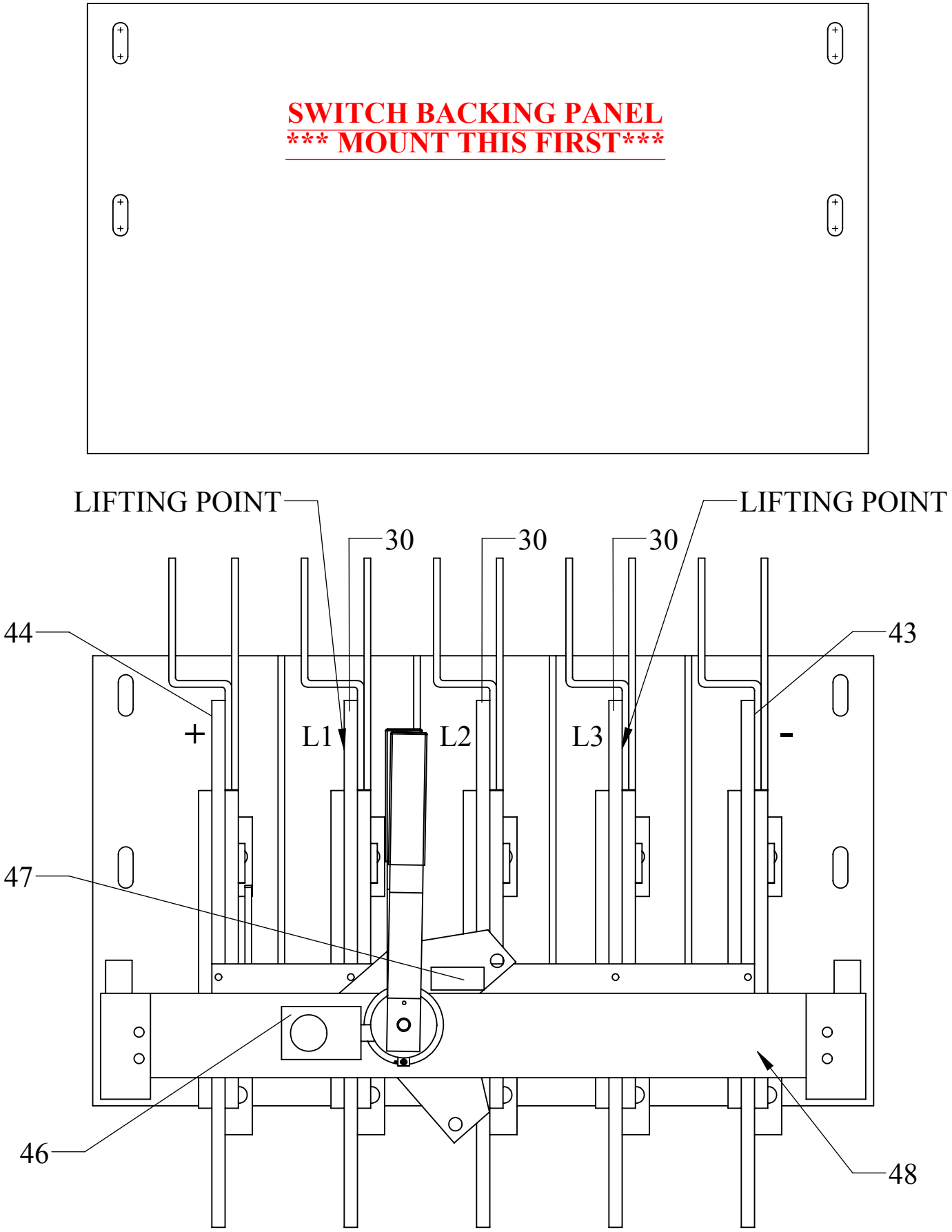

5 POLE DISCONNECT SWITCH
FIG 2

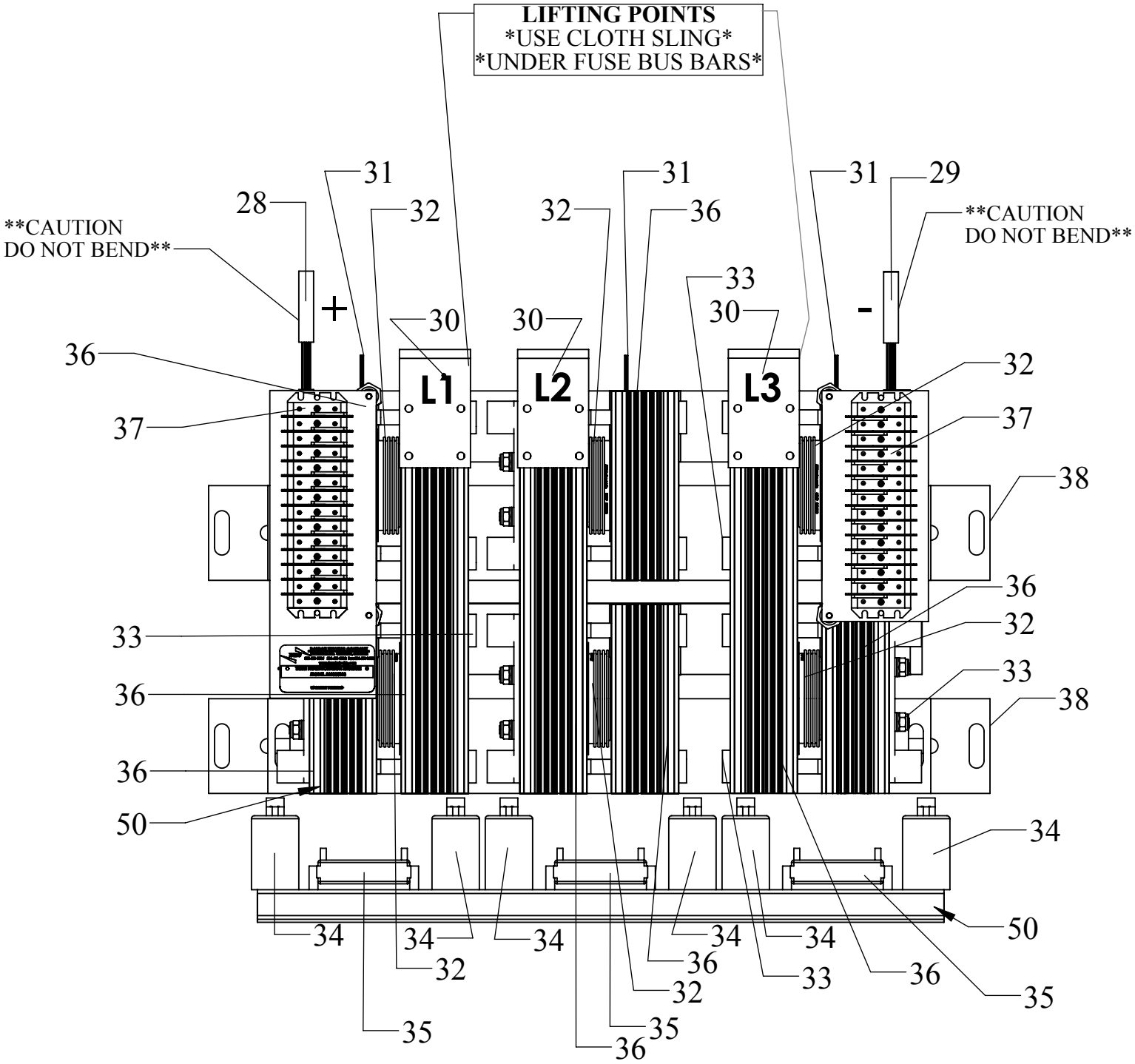

3 PHASE RECTIFIER BRIDGE
FRONT VIEW
FIG 3

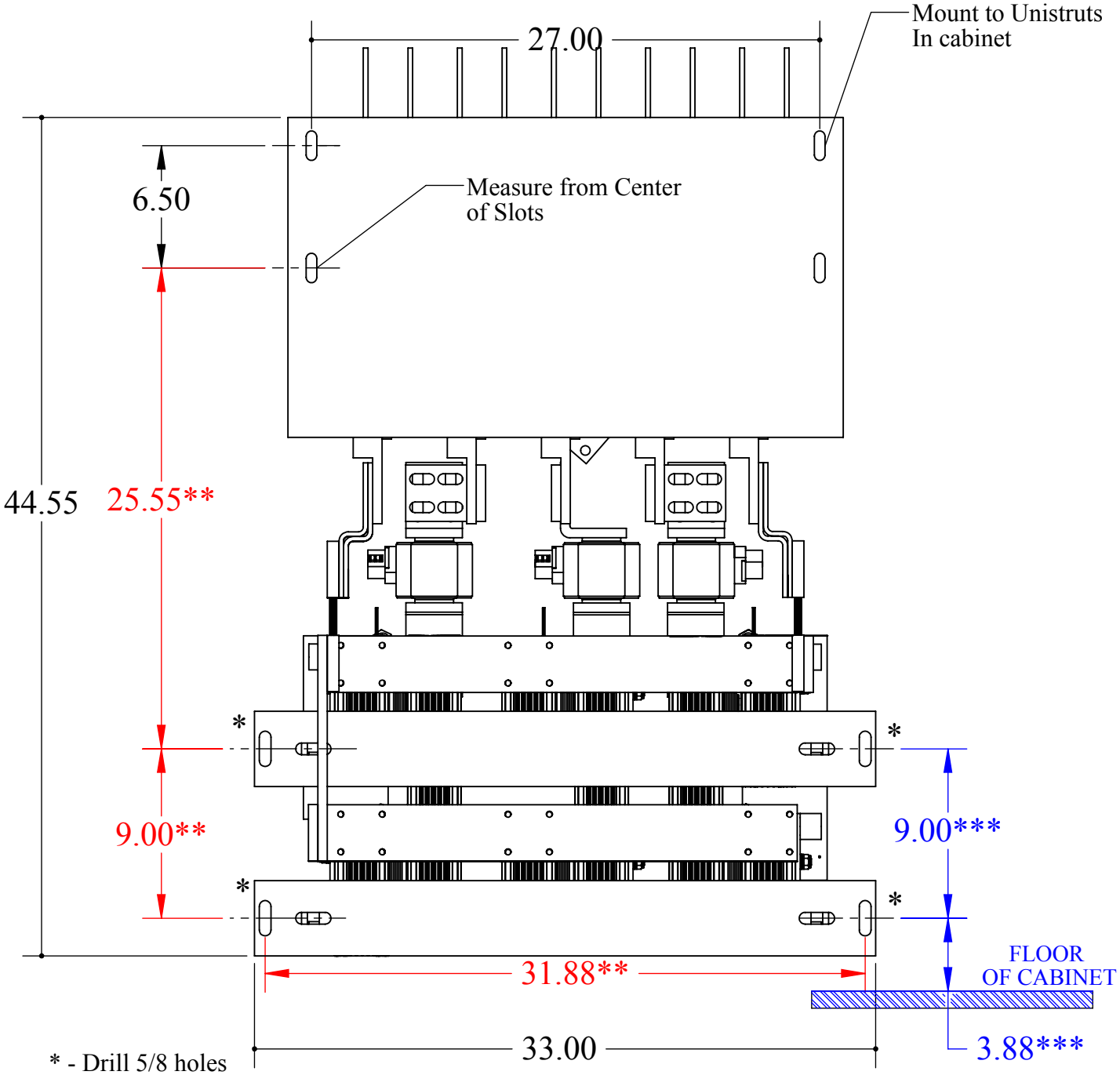

* - Drill 5/8 holes
through side rails in cabinet

** - Drill Dimensions For
Bridge& New Switch

*** - Drill Dimensions For
Bridge with Existing Switch

Rear View Showing
Mounting Measurements
Fig 4

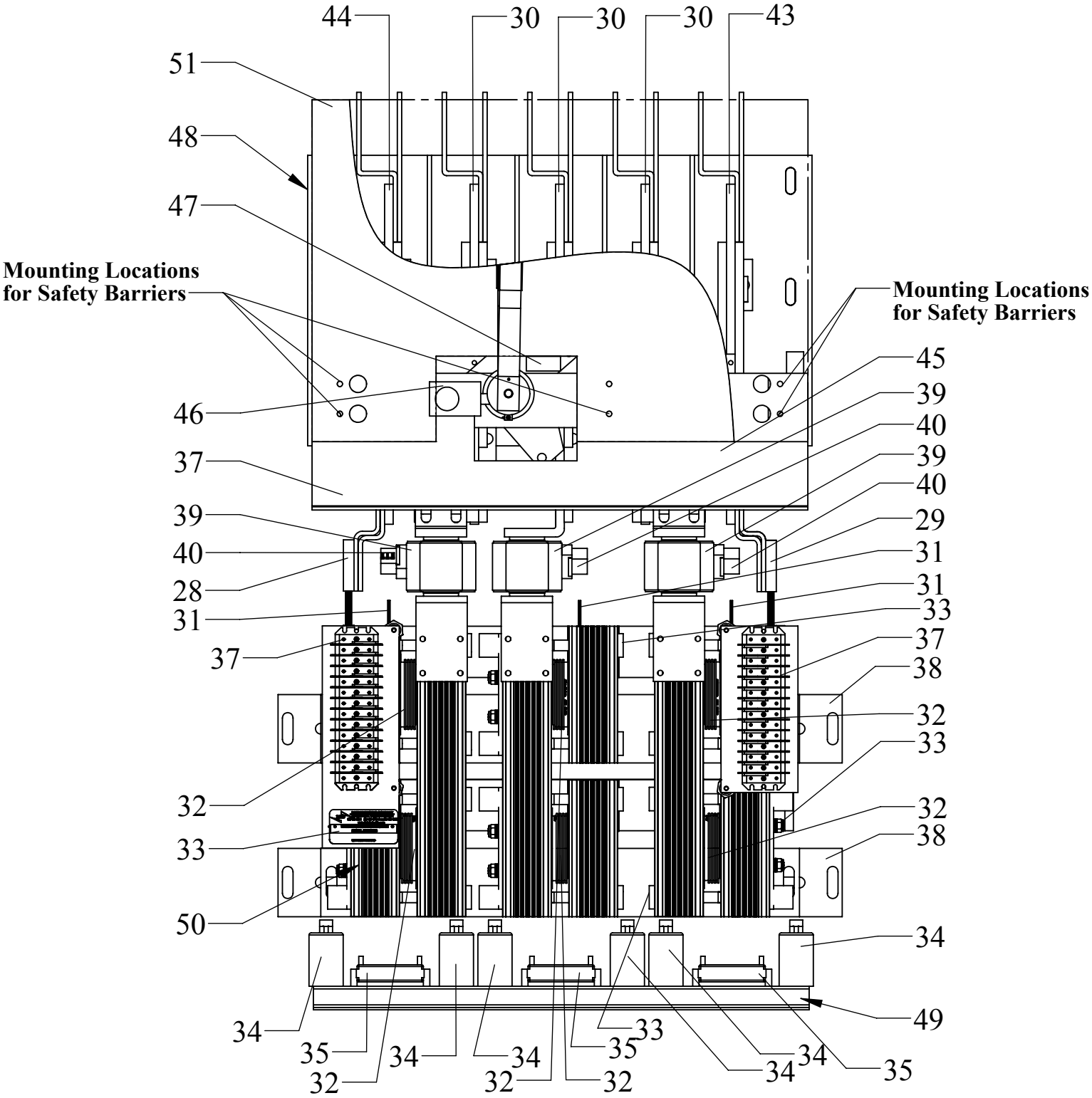

3 PHASE RECTIFIER BRIDGE WITH
5 POLE SWITCH AND FUSES
FRONT VIEW
FIG 5

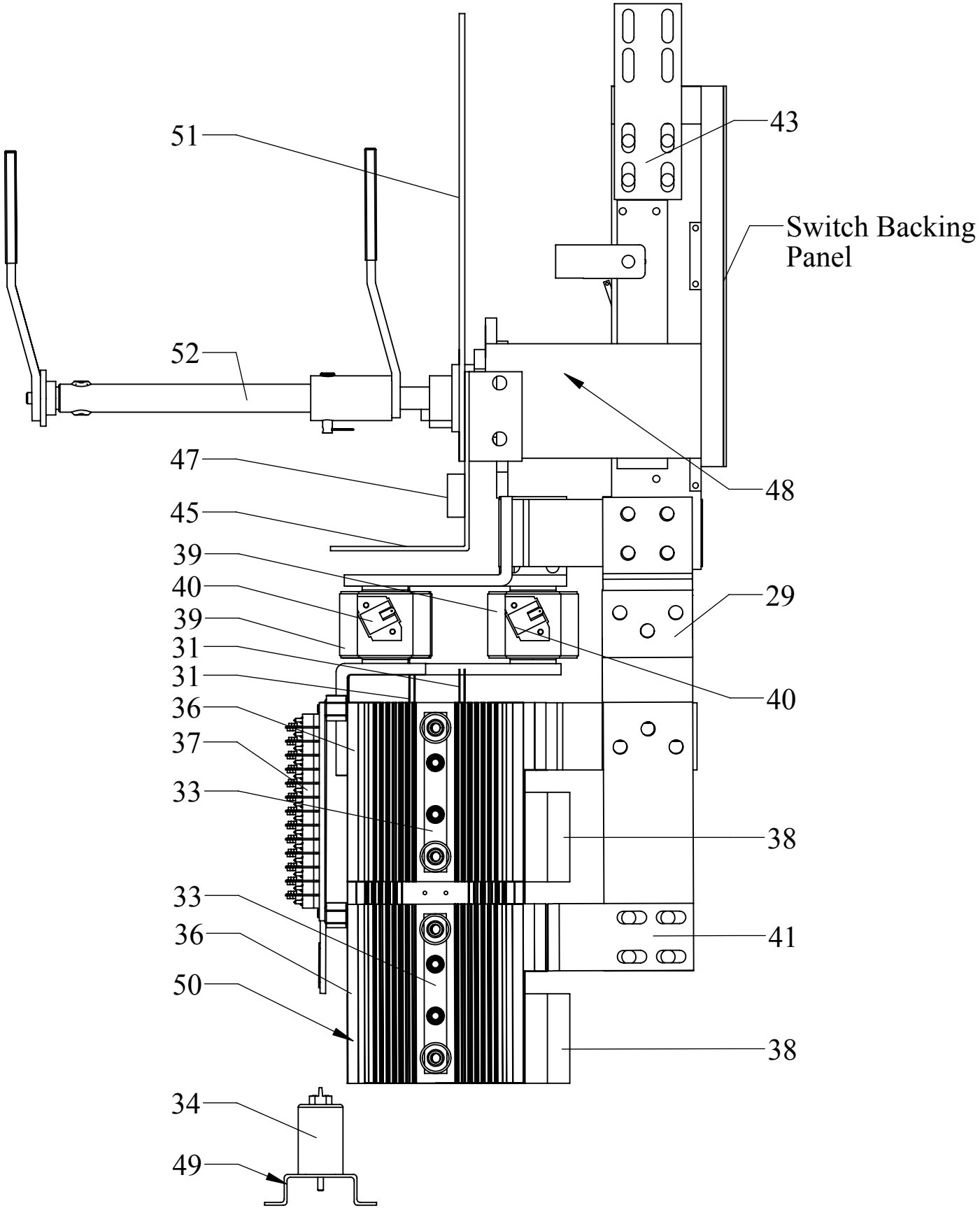

3 PHASE RECTIFIER BRIDGE WITH 5 POLE SWITCH RIGHT SIDE VIEW FIG 6

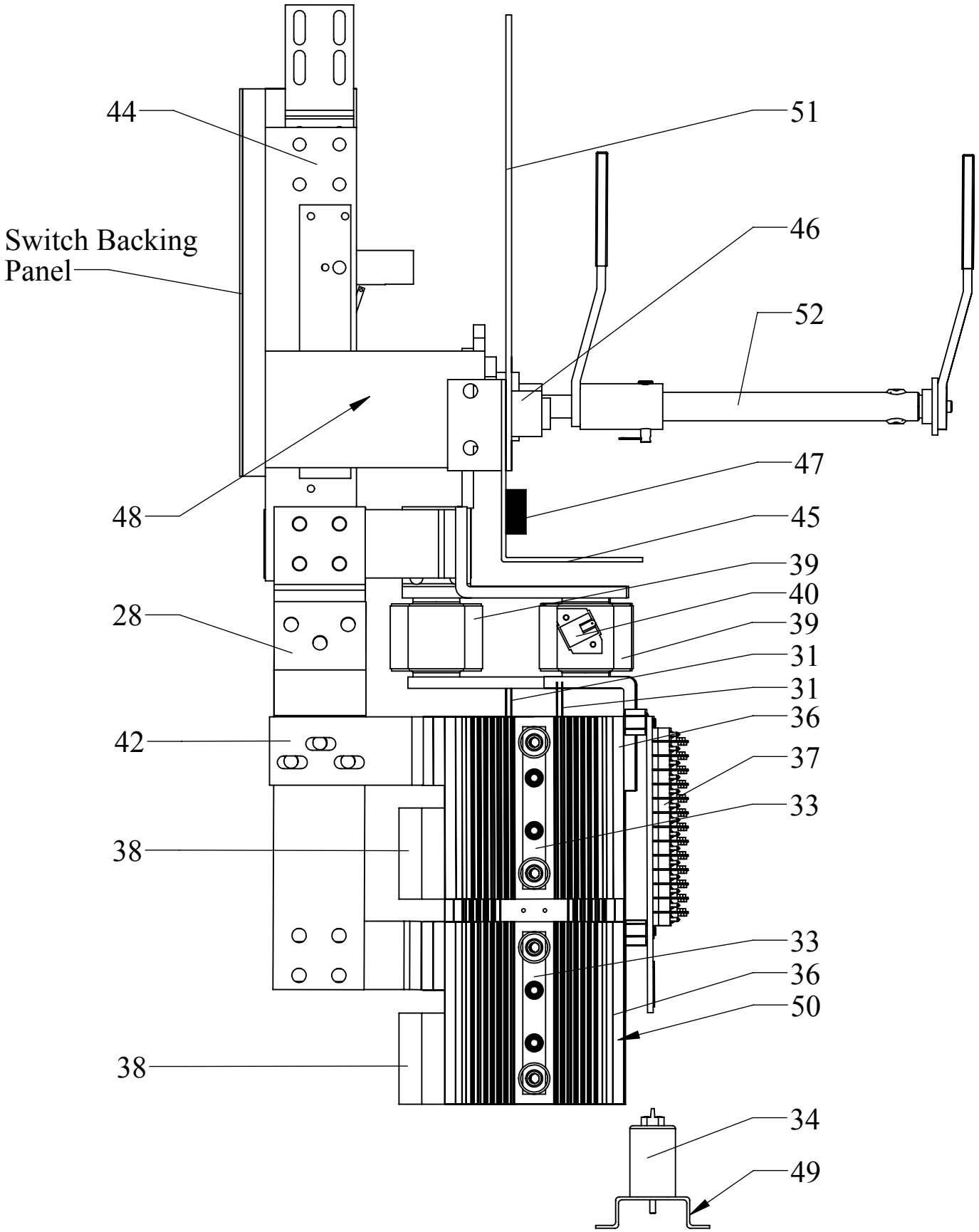

3 PHASE RECTIFIER BRIDGE
WITH 5 POLE SWITCH
LEFT SIDE VIEW
FIG 7

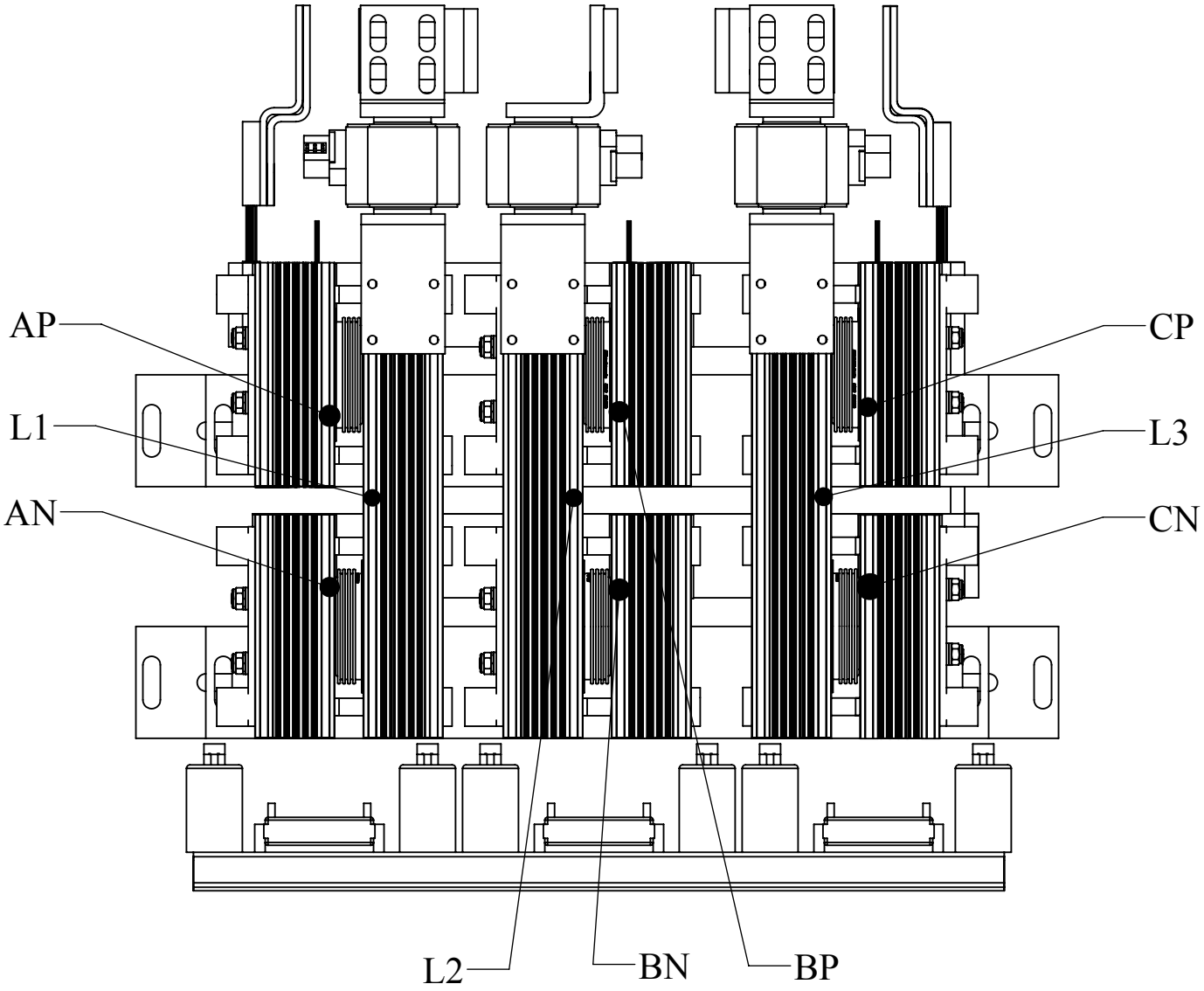

SNUBBER CONNECTION POINTS Fig 8

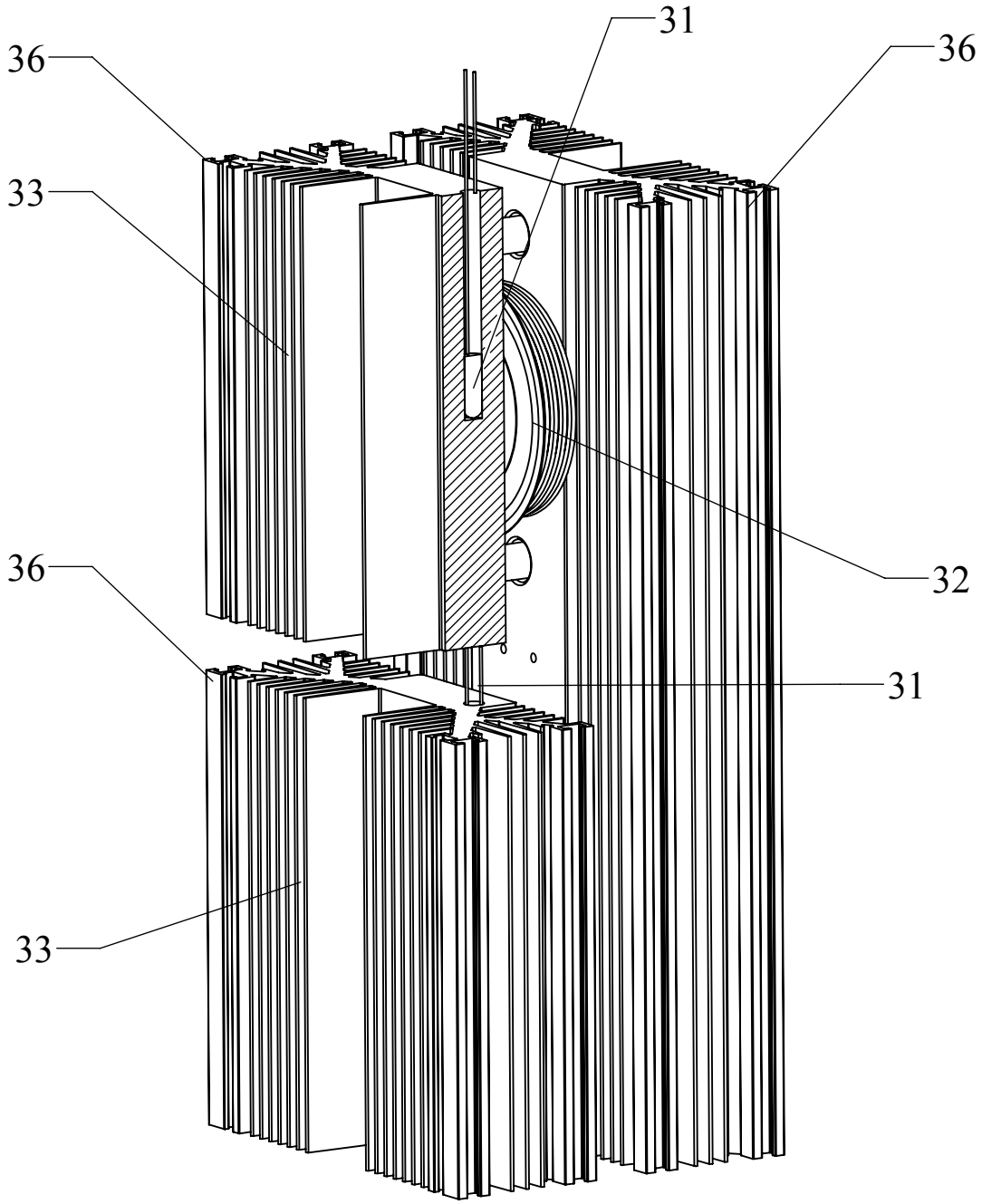

PHASE ASSEMBLY SHOWING HEATSINK DETAIL
FIG 9

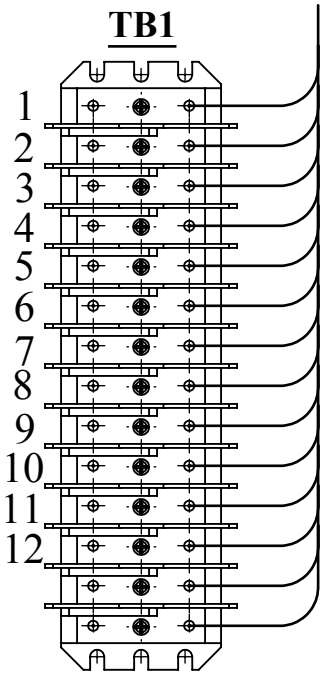

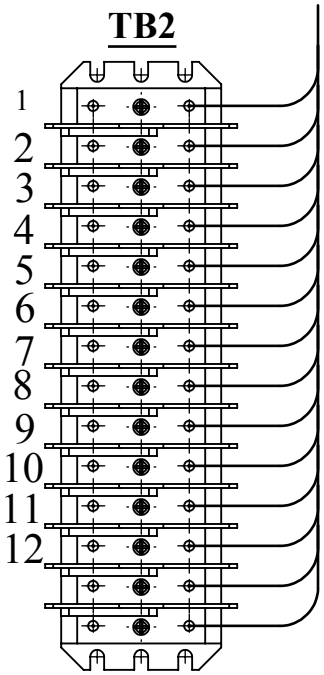

TB1 Wiring Table			
1	**RTD4 - RED**	**8**	**RTD1 - WHT**
2	**RTD4 - WHT**	**9**	**RTD2 - RED**
3	**RTD5 - RED**	**10**	**RTD2 WHT**
4	**RTD5 - WHT**	**11**	**RTD3 - RED**
5	**RTD6 - RED**	**12**	**RTD3 - WHT**
6	**RTD6 - WHT**	**13**	**Spare**
7	**RTD1 - RED**	**14**	**Spare**

TB2 Wiring Table			
1	**Switch Aux Cntc - N/O**	**8**	**F3/SW - 1**
2	**Switch Aux Cntc - COM**	**9**	**F2/SW - 4**
3	**Neg DC Shunt M2 - SW**	**10**	**F2/SW - 1**
4	**Neg DC Shunt M2 - BDG**	**11**	**F1/SW - 4**
5	**Pos DC Shunt M1 - SW**	**12**	**F1/SW - 1**
6	**Pos DC Shunt M1 - BDG**	**13**	**Spare**
7	**F3/SW -4**	**14**	**Spare**

TERMINAL BLOCK WIRING DIAGRAM
FIG 10

DESIGNATIONS	
28	POSITIVE DC SHUNT - 2000A - 50mV(M1)
29	NEGATIVE DC SHUNT - 2000A - 50mV(M2)
30	AC CONNECTIONS (PHASE A,B,C)
31	RTD1-6(RESISTANCE TEMPERATURE DETECTORS)
32	HIGH POWER RECTIFIER DIODES
33	SEMICONDUCTOR CLAMPS
34	SNUBBER CAPACITORS (C)
35	SNUBBER RESISTORS (R)
36	HIGH EFFICIENCY A11 HEATSINK
37	TERMINAL BLOCKS (TB1-TB2)
38	RECTIFIER BRIDGE MOUNTING RAILS
39	AC SEMICONDUCTOR FUSES (F1-F2-F3)
40	FUSE BLOWN INDICATORS (F1/SW-F2/SW-F3/SW)
41	RECTIFIER BRIDGE MAIN NEGATIVE DC BUS
42	RECTIFIER BRIDGE MAIN POSITIVE DC BUS
43	5 POLE SWITCH MAIN NEGATIVE DC CONNECTION
44	5 POLE SWITCH MAIN POSITIVE DC CONNECTION
45	SAFETY BARRIER
46	5 POLE SWITCH KIRK KEY INTERLOCK
47	5 POLE SWITCH AUXILLARY CONTACTS
48	5 POLE DISCONNECT SWITCH
49	SNUBBER ASSEMBLY
50	3 PHASE BRIDGE ASSEMBLY
51	SWITCH SAFETY BARRIER
52	EXTENSION ROD OPTION

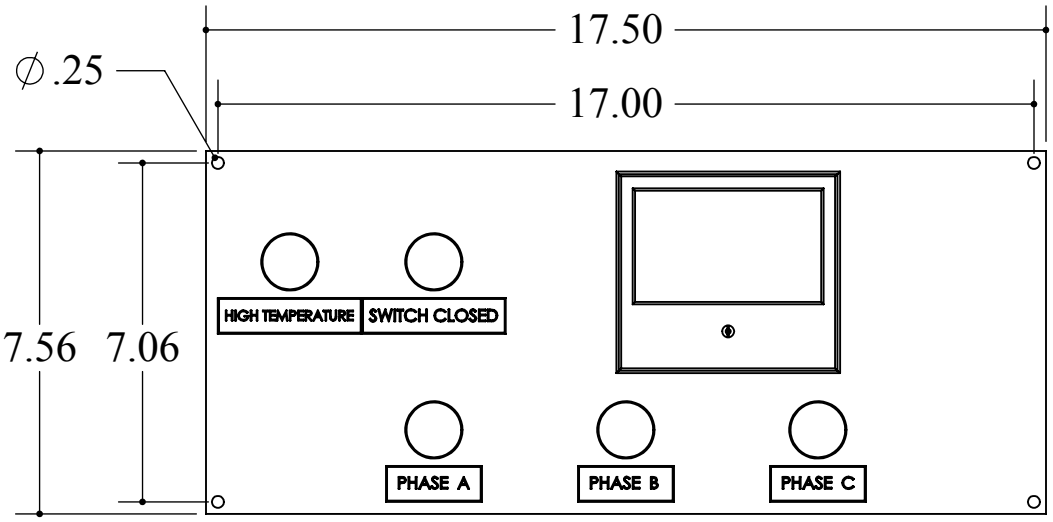

A20095A

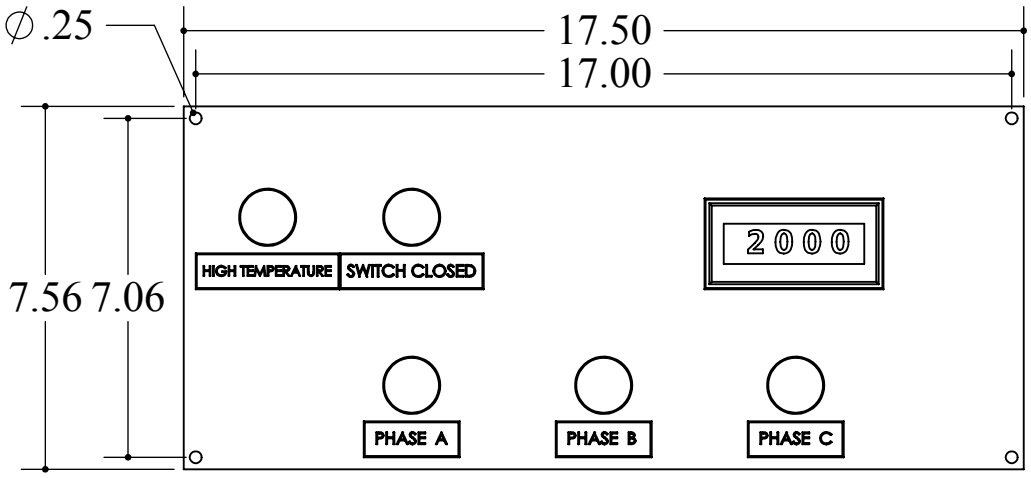

A20095D

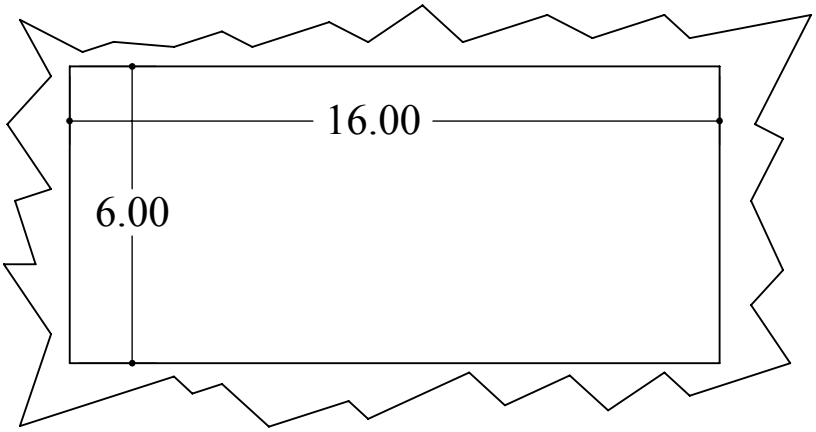

HOLE CUT OUT DIMENSIONS

LIGHT PANEL OPTIONS
FIG 11

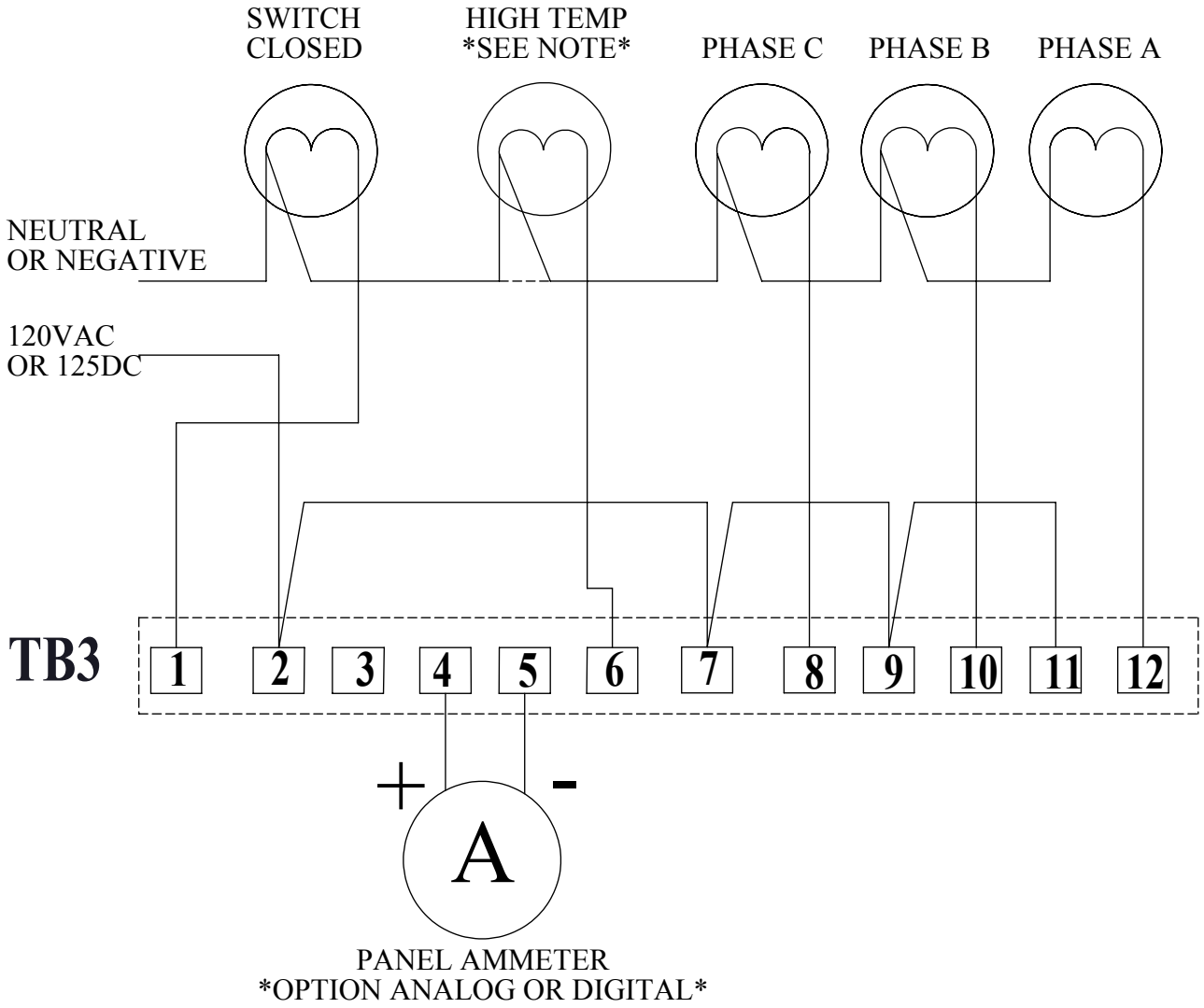

Note:
1] Temperature Relay required to monitor RTD's similar to BE3-49R. Not provided in package.
2] Wiring and terminal block not provided.

LIGHT PANEL WIRING DIAGRAM
FIG12

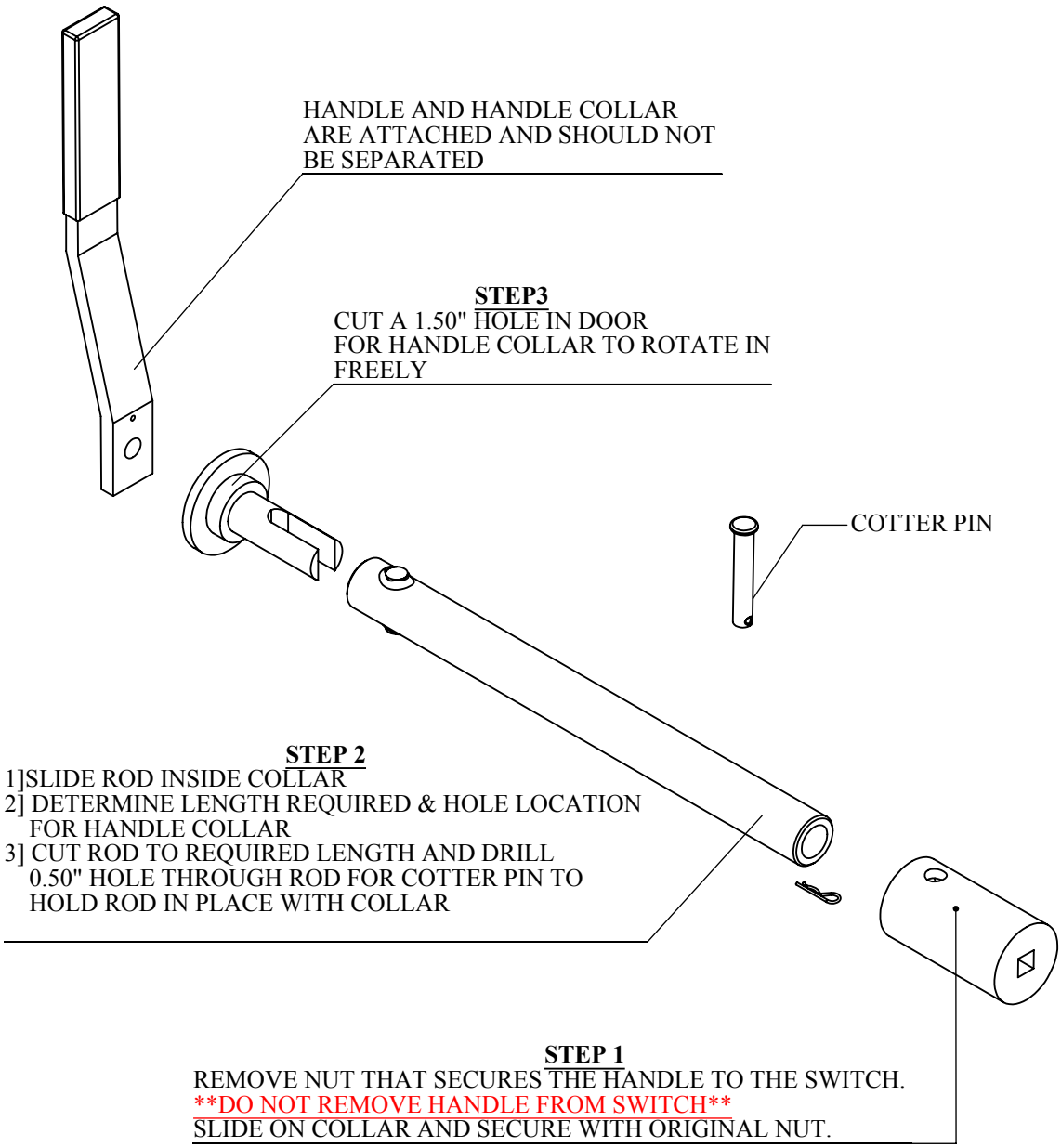

EXTENSION ROD ASSEMBLY OPTION
FIG 13